Per-unit System

In power system analysis, per-unit (pu) system is used to express a physical variable as a fraction of base or reference value. Per-Unit (pu) is commonly used for the calculation of voltage, current, impedance, and power in power flow and related calculations.

Per-unit system advantages:

- Circuits are simplified.
- The per-unit values for various components lie within a narrow range regardless of the equipment rating For example, voltages have the same range in per-unit in all parts of the system from EHV system to distribution and utilization.
- When expressed in the per-unit, machines parameters usually fall in narrow range regardless of machines size. For example, generator reactances in per unit are similar for both 100 MVA machines and 1000MVA machines. This facilitates data checking and hand calculations.
- For circuits connected by the transformers, per- unit system is suitable. By choosing a suitable base kV for the circuits, the per-unit reactance remains the same referred to either side of the transformer. Therefore, the various circuits can be connected in the reactance diagram.
- Sqrt(3) factor in the three phase circuit calculations is eliminated.
- Per-unit (pu) system is ideal for computer simulations.

Per-unit system:

For power, voltage, current and impedance, the per unit quantity may be obtained by dividing by the respective base of that quantity as follows:

$$\text{Per}-\text{unit value} = \frac{\text{Actual value}}{\text{Base value}}$$

$$S(pu) - \frac{S}{S_{base}}, \quad V(pu) - \frac{V}{V_{base}},$$

$$I(pu) - \frac{I}{I_{base}}, \quad Z(pu) - \frac{Z}{Z_{base}}$$

Where S represents the apparent power of the system in MVA.

Since voltage, current, impedance and power are related to each other, then only two base or reference quantities can be defined and the base quantities for the other two can be derived from them. Power and voltage are the most often specified, they are usually chosen to define the independent base quantities.

For three—phase systems:
If S_b (or MVA_b) and V_b (or kV_b) are the selected base quantities of power (complex, active or reactive) and *voltage* respectively, then:

$$S_{pu} = \frac{S\,(MVA)}{S_b}, \quad P_{pu} = \frac{P\,(MW)}{S_b}, \quad Q_{pu} = \frac{Q\,(MVAR)}{S_b}, \quad V_{pu} = \frac{V\,(kV)}{V_b}$$

$$\text{Base current} \quad I_b = \frac{S_b \times 10^3}{\sqrt{3}\,V_b} \quad \text{or} \quad I_b = \frac{MVA_b \times 10^3}{\sqrt{3}\,(kV_b)}$$

$$\text{Base impedance:} \quad Z_b = \frac{V_b/\sqrt{3}}{I_b} = \frac{V_b^{\,2}}{S_b} \quad \text{or} \quad Z_b = \frac{(kV_b)^2}{MVA_b}$$

2.2.3 Conversions from one Base to another

It is usual to give data in per-unit for each component in the system referred to its own rating. As different components can have different ratings and different from the system rating, it is necessary to convert all quantities to a common base to do arithmetic or algebraic operations. This can be done for three phase systems as follows.

$$Z_{pu,\,new} = Z_{pu,\,old}\,\frac{(S_b)_{new}}{(S_b)_{old}}\left[\frac{(V_b)_{old}}{(V_b)_{new}}\right]^2$$

$$\text{or} \quad Z_{pu,\,new} = Z_{pu,\,old}\,\frac{(MVA_b)_{new}}{(MVA_b)_{old}}\left[\frac{(kV_b)_{old}}{(kV_b)_{new}}\right]^2$$

Per-unit quantities across transformers:

When a transformer is present in a power system, the power rating on either side of the transformer remains the same.The voltage rating changes, and so the base voltage across the transformer sides will change. If the voltage base in the primary of a transformer is (V_b), then the voltage base in the secondary of this transformer [$V_b \times (N_2/N_1)$].

Where (N_1/N_2) is turns ratio of the transformer.

Solved examples:

(1) An electrical generator has a power of 40MW, a power factor of 0.8 lagging and a voltage of 210kV. The synchronous impedance of the generator is 0.5pu. Find values of power, voltage, current and impedance in per-unit referred to 50MVA and 220kV.

Solution:

$P = 40\,MW, \quad V = 210\,kV, \quad PF = 0.8, \quad X = 0.5\,pu$

$S_b\,(\text{or } MVA_b) = 50MVA, \quad V_b\ (\text{or } kV_b) = 220\,kV$

- Power in per-unit is:

$$P_{pu} = \frac{P}{S_b} = \frac{40}{50} = 0.8\,pu$$

- Voltage in per-unit is:

$$V_{pu} = \frac{V}{V_b} = \frac{210}{220} = 0.95\,pu$$

- Current in per-unit is calculated as follows

$$P = \sqrt{3}\ V\,I\cos\varphi \quad \Rightarrow \quad I = \frac{40 \times 10^3}{\sqrt{3} \times 210 \times 0.8} = 137.46\ A$$

$$I_b = \frac{MVA_b \times 10^3}{\sqrt{3}\,(kV_b)} = \frac{50 \times 10^3}{\sqrt{3}\ \times 220} = 131.22\,A$$

$$\Rightarrow \quad I_{pu} = \frac{I\,(A)}{I_b\ (A)} = \frac{137.46}{131.22} = pu$$

- Generator impedance in per-unit is calculated as follows

$$Z_{pu,\,new} = Z_{pu,\,old}\,\frac{(MVA_b)_{new}}{(MVA_b)_{old}}\left[\frac{(kV_b)_{old}}{(kV_b)_{new}}\right]^2$$

$$\Rightarrow \quad Z_{pu,\,new} = 0.5\left[\frac{50}{50}\right]\left[\frac{210}{220}\right]^2 = 0.57\,pu$$

(2) Draw the per-unit reactance diagram for the power system shown in figure below assuming that the base is 30MVA and 6.6kV in generator G_1 circuit

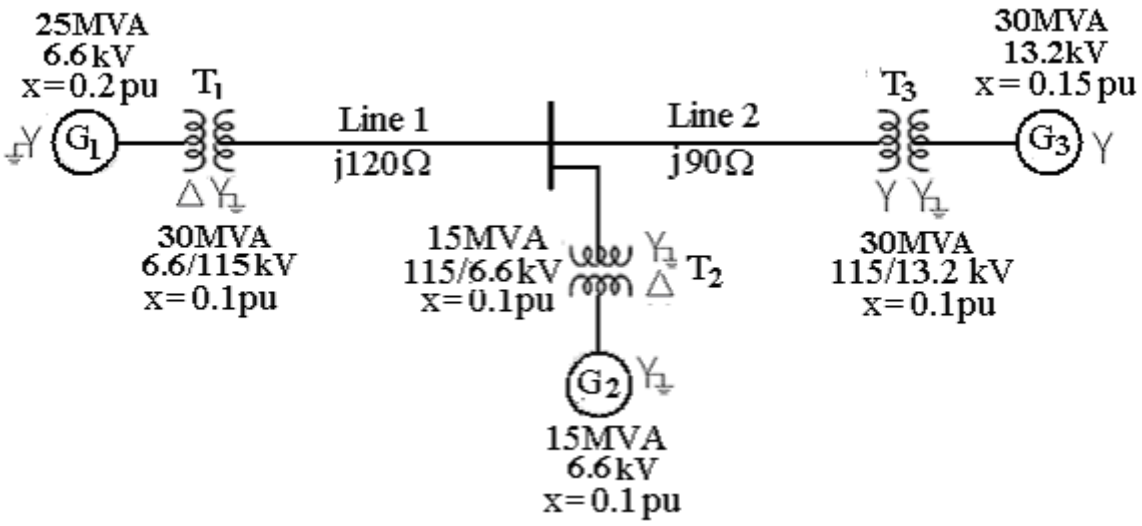

Solution:

$MVA_b = 30MVA$, $kV_b = 6.6kV$ in G_1 circuit

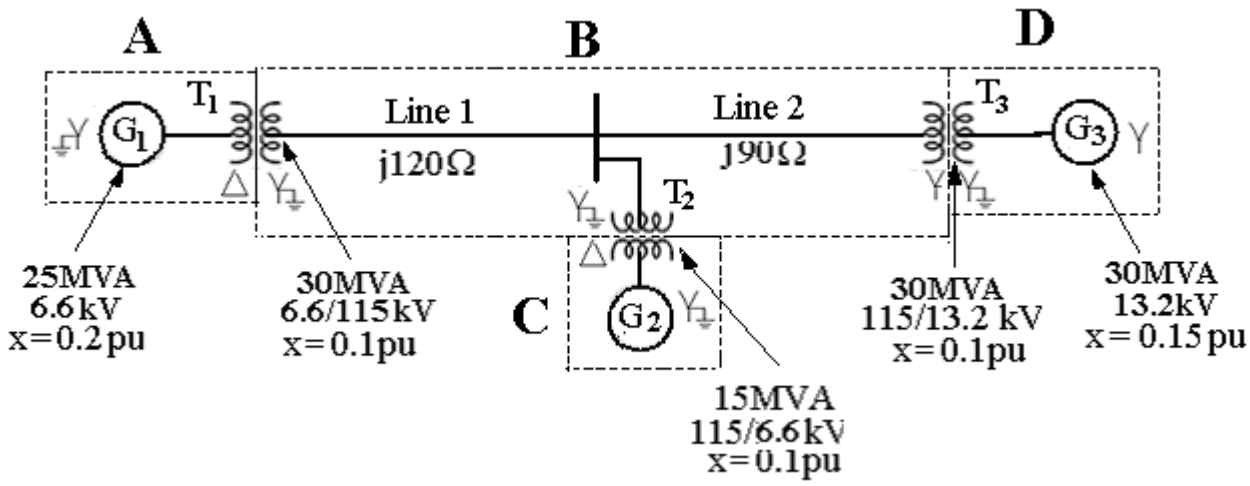

- For circuit A (G_1 circuit):

$MVA_b = 30$, $kV_b = 6.6$

$$Z_{G1} = j0.2 \times \frac{30}{25} = j0.24\,pu, \quad Z_{T1} = j0.1 \times \frac{30}{30} = j0.1\,pu$$

- For circuit B:

$$MVA_b = 30, \quad kV_b = 6.6 \times \frac{115}{6.6} = 115$$

$$Z_b = \frac{(kV_b)^2}{MVA_b} = \frac{(115)^2}{30} = 440.83\Omega$$

$$Z_{Line1} = \frac{j120}{440.83} = j0.2722\,pu, \quad Z_{Line2} = \frac{j90}{440.83} = j0.2042\,pu$$

$$Z_{T2} = j0.1 \times \left(\frac{30}{15}\right) = j0.2\,pu, \quad Z_{T3} = j0.1 \times \left(\frac{30}{30}\right) = j0.1\,pu$$

- For circuit C:

$$MVA_b = 30, \quad kV_b = 115 \times \left(\frac{6.6}{115}\right) = 6.6$$

$$Z_{G2} = j0.1 \times \left(\frac{30}{15}\right) = j0.2\,pu$$

- For circuit D:

$$MVA_b = 30, \quad kV_b = 115 \times \left(\frac{13.2}{115}\right) = 13.2$$

$$Z_{G3} = j0.15 \times \left(\frac{30}{30}\right) = j0.15\,pu$$

The per-unit reactance diagram is as shown in following figure:

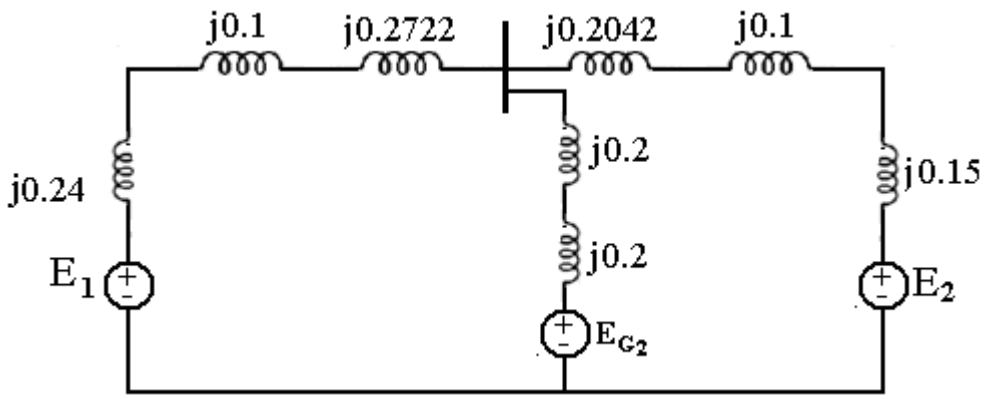

(3) A 100MVA, 33kV three-phase synchronous generator has a reactance of 15%. This generator is connected to a group of motors through a transmission line and two transformers as shown in figure. Draw the per-unit reactance diagram for this system.

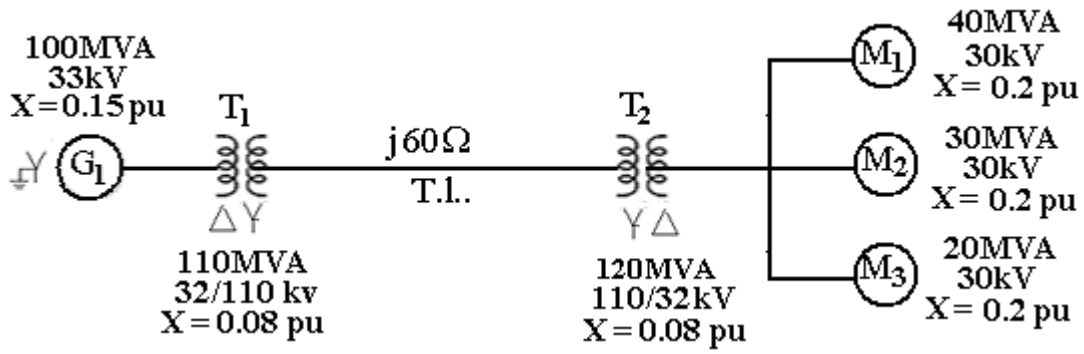

Solution:

Select as a base 100MVA and 33kV in G_1 circuit

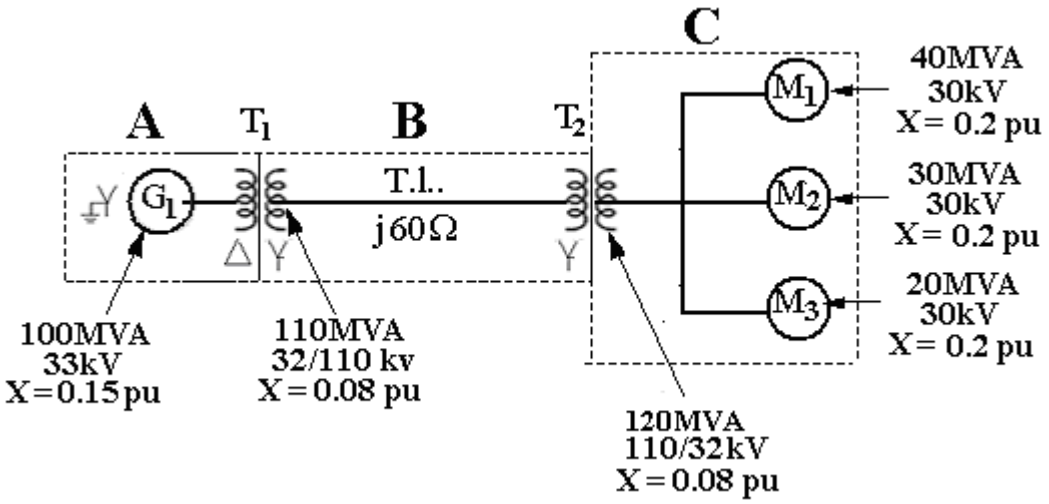

- For circuit A (G_1 circuit):

$$MVA_b = 100, \quad kV_b = 33$$

$$Z_{pu,\,new} = Z_{pu,\,old}\left[\frac{(MVA_b)_{new}}{(MVA_b)_{old}}\right]\left[\frac{(kV_b)_{old}}{(kV_b)_{new}}\right]^2$$

$$\boxed{Z_{G1} = j0.15\,pu}$$

$$Z_{T1} = j0.08 \times \left(\frac{100}{110}\right)\left(\frac{32}{33}\right)^2 = j0.0684\,pu$$

- For circuit B:

$$MVA_b = 100, \quad kV_b = 33 \times \left(\frac{110}{32}\right) = 113.44$$

$$Z_b = \frac{(kV_b)^2}{MVA_b} = \frac{(113.44)^2}{100} = 128.68\,\Omega$$

$$Z_{T.L.} = \frac{j60}{128.68} = j0.466\,pu$$

$$Z_{T2} = j0.08 \times \left(\frac{100}{120}\right)\left(\frac{110}{113.44}\right)^2 = j0.0627\,pu$$

- For circuit C:

$$MVA_b = 100, \quad kV_b = 113.44 \times \frac{32}{110} = 33$$

$$Z_{M1} = j0.2 \times \left(\frac{100}{40}\right)\left(\frac{30}{33}\right)^2 = j0.413\,pu$$

$$Z_{M2} = j0.2 \times \left(\frac{100}{30}\right)\left(\frac{30}{33}\right)^2 = j0.551\,pu$$

$$Z_{M3} = j0.2 \times \left(\frac{100}{20}\right)\left(\frac{30}{33}\right)^2 = j0.826\,pu$$

and the per-unit reactance diagram is as shown in following figure:

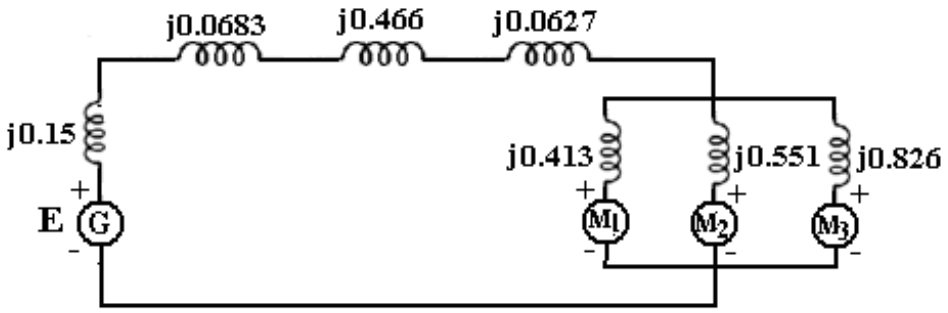

(4) The single-line diagram of a 3-phase power system is shown in figure. Choose as a common base the values 100MVA and 13.8kV in the generator circuit. Draw the per-unit diagram for this system.

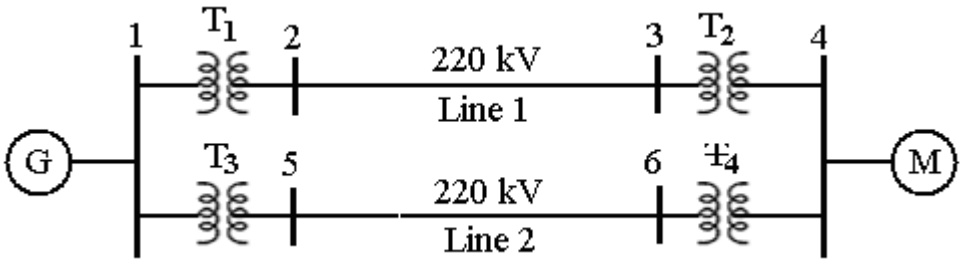

Data of the system components are:
Generator: 90MVA, 13.8kV. X_G=18%
Transformer T_1: 50MVA, 13.8/220kV. X_{T1}=10%
Transformer T_2: 50MVA, 220/11kV. X_{T2}=10%
Transformer T_3: 50MVA, 13.8/132kV. X_{T3}=10%
Transformer T_4: 50MVA, 132/11kV. X_{T4}=10%
Motor M: 80MVA, 10.45kV. X_M=20%
Transmission lines: $X_{line1} = 50\Omega$, $X_{line12} = 70\Omega$

Solution:

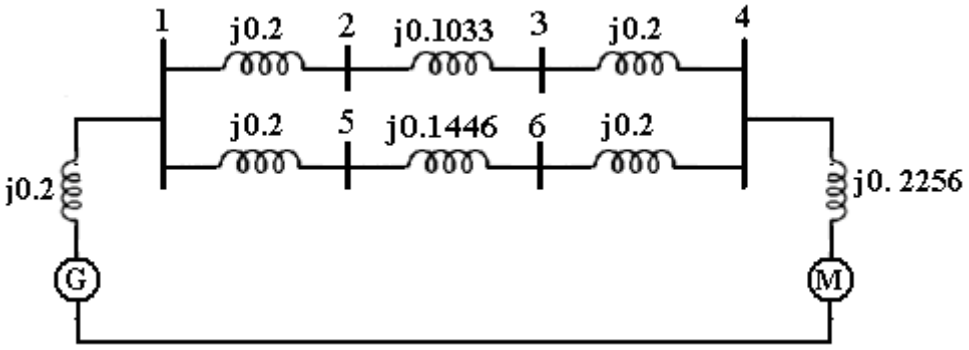
1
j0.2
2
j0.1033
3
j0.2
4
j0.2
5
j0.1446
6
j0.2
j0.2
j0. 2256
G
M